INSTALLATION GUIDE
DUOFUSE DECKING

We recommend reading through the entire installation instructions before starting, and **check the website for the latest installation instructions. Plastivan disclaims responsibility for damage caused by, or failure of, the product as a result of faulty installation caused by failure to follow these instructions.** Failure to follow these instructions will void Plastivan warranty.
All decking and profiles should be acclimatized for minimum 24 hours before starting the installation. Remove packaging if present. Stack the boards horizontally and cover against rain and sunshine. Do not install the decking in temperatures below 5°C. Wood composite cuts, drills and installs similar to solid wood using standard wood working tools. We recommend carbide-tipped saw blades. Use a drill with low speed and high torque. Wood Plastic Composite products can under no circumstances be used as structural elements. The colours and the surface brushing may differ slightly from production deliveries and are not contractual. We advise not to mix boards from different production batches. You can see the manufacturing date in the groove of each board.
Boards have to be placed in the same direction (a mark is present at the inner side of every board). Always supply the decking with enough ventilation, slope and expansion space.

Parts:

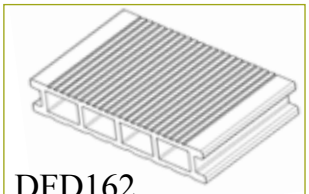

DFD162
Board 162x28mm

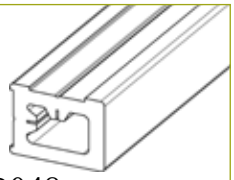

DFB048
Beam 48,5x35mm

DFS076
Skirt 76x10mm

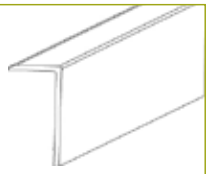

DFL078
L-Profile 78x39x4mm

DFC004
starter and
finishing clip

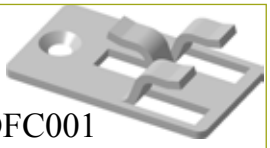

DFC001
Standard clip

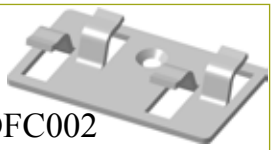

DFC002
Butting clip

DIN 7504
Screw 4 x 30mm

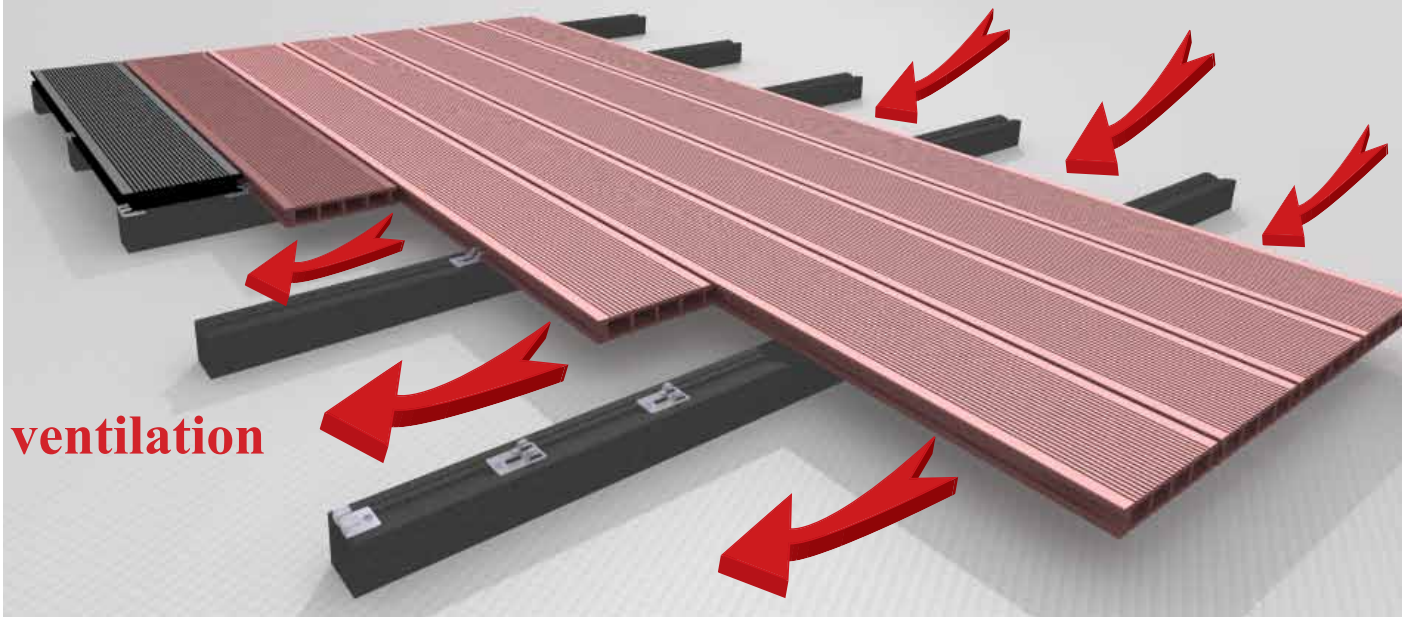

Installation on a solid ground:

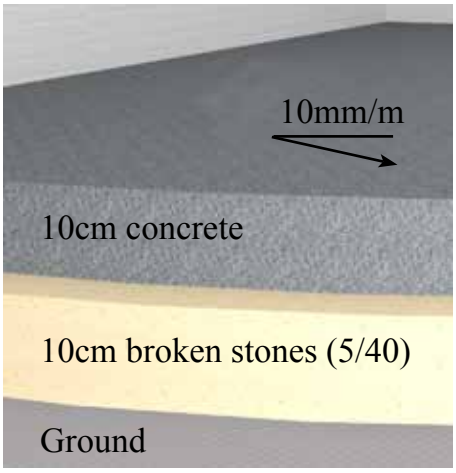

The deck must be installed either on a concrete flooring, on a structure or on plastic pedestals.

The ground has to be flat and stable with **a slope of 10mm every meter** in the direction of the board and preferably away from the house. This slope has to be maintained on the board so that the **drainage of the water** is optimized and no water can remain on, in or under the board.

Place the beams onto the concrete and under no circumstances into the concrete. The spacing between the beams has to be maintained. The boards cannot be fixed or glued directly onto the surface.

It is essential that **sufficient ventilation** is provided under and around the boards. This can be done by not finishing off completely the sides of the terrace.
The complete foundation (ground, broken stones, concrete,...) has to be prepared according to the general building regulations.

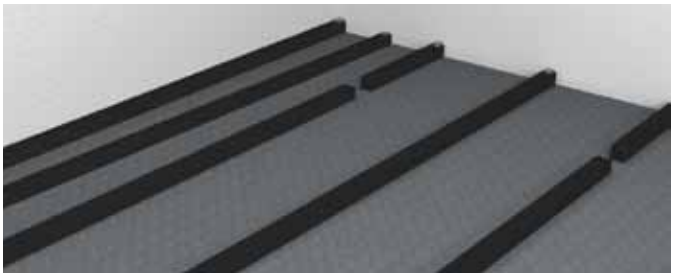

Drainage in the direction of the boards (crosswise to the beams). To ensure good drainage, a spacing of 20mm must be kept at the end of the beams.

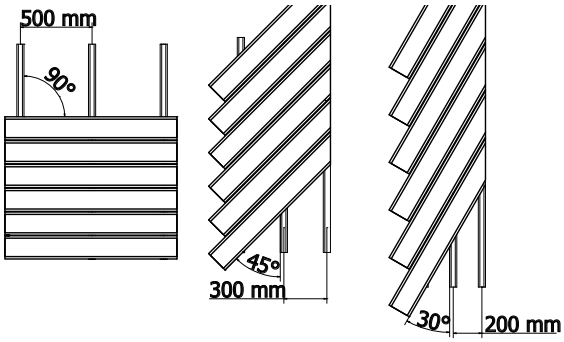

When installing the boards at an angle, the indicated spacing must be applied.

Fixing of the beams:

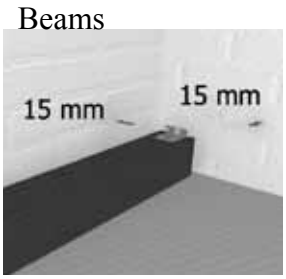

The distance between the beams is a maximum 500mm. **Install an extra beam at 200mm distance from the first and the last beam** at the beginning and at the end of the decking for extra sturdiness.

Before fixing the beams, holes need to be drilled in all beams. Drill holes (dia 8mm) through the beam with a wood drill. Beams need to be fixed on the foundation every 500mm in the correct way with correct attachments (screws and plugs min. 120mm long). Make sure that the fixings of the beam are not on the same spot as the fixings of the clips. To avoid this, drill the first hole at 6cm of the edge and then every 50cm (see table on the next page).

Align all beams, so that the starter clips can be fixed at the front of every beam. Stretch a (mason) rope between the first and the last beam. **The beams need to be placed with 15 mm spacing from any structure in both directions.**

Drill the holes of the beams through (dia 8mm) in the foundation with a stone drill.

number of boards abreast	width terrace (cm)	fixing of screws of clips (cm)	fixing of screws of beam (cm)
1	16,2	1	6
2	32,9	19,1	
3	49,6	35,8	
4	66,3	52,5	56
5	83,0	69,2	
6	99,7	85,9	
7	116,4	102,6	106
8	133,1	119,3	
9	149,8	136	
10	166,5	152,7	156
11	183,2	169,4	
12	199,9	186,1	
13	216,6	202,8	206
14	233,3	219,5	
15	250,0	236,2	
16	266,7	252,9	256
17	283,4	269,6	
18	300,1	286,3	
19	316,8	303	306
20	333,5	319,7	
21	350,2	336,4	
22	366,9	353,1	356
23	383,6	369,8	
24	400,3	386,5	394

Use a countersink to make the holes conical so that the screws and plugs are sunk.

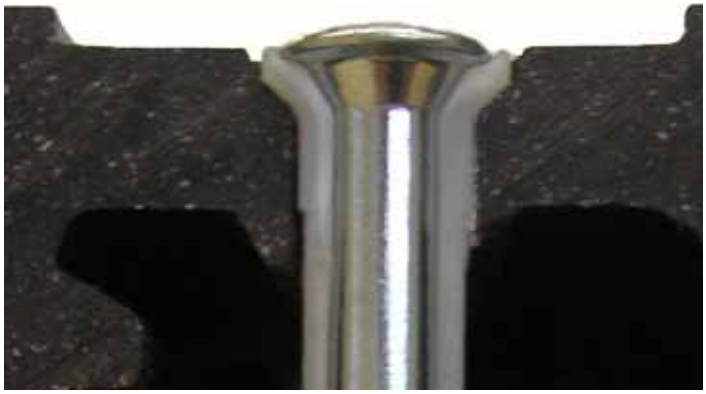

When placing 2 or more beams behind one another, saw the first beam at 390cm. Fasten the beam a last time at 382cm. Leave 20mm space between the first and the second beam. Drill the second beam also at 6cm of the edge and then again at every 50cm.

The final edges of the beams also need to be cut flush so that the finishing clips can be attached.

Fixing of clips and boards:

DFC004
Starter and finishing clip

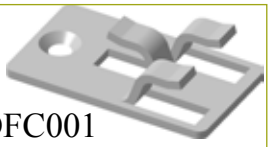

DFC001

Standard clip

DFC002

Butting clips

Pre-drilling is mandatory before fixing the clips. Always place the clips in the supplied groove.

5mm/m spacing must be kept to allow expansion, with a **minimum of 15mm away from every wall or fix object.**
Every board has to be supported every 500mm and with a minimum of 3 beams.

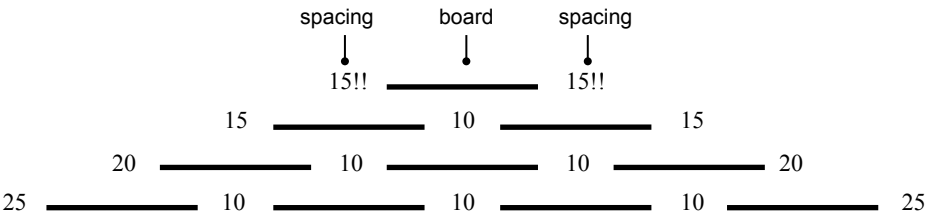

number of boards	total length (m)	total of spacing (mm)
1	4	4x0,5mm= 20
2	8	8x0,5mm= 40
3	12	12x0,5mm=60
4	16	16x0,5mm=80

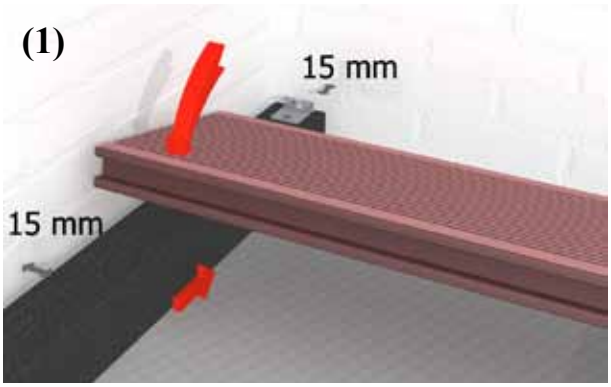

Fix the starting clip at the end of the beam, leaving **15mm of spacing on all sides to allow for expansion.**
The starting clips, beam and board are at least 15mm away from every wall or fix object.
Insert lead edge of decking board into the starting clip **(1)**.

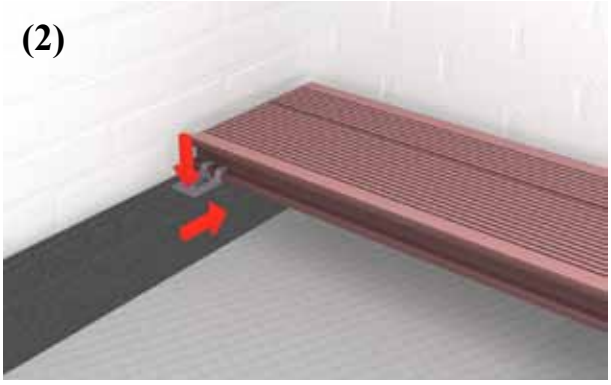

Push a standard clip onto the opposite lip of the board and secure to beam **(2)**.

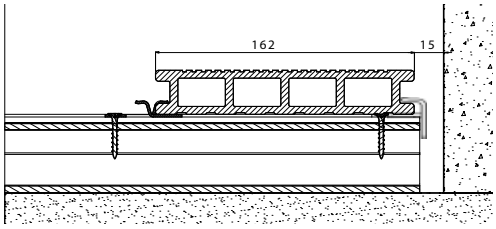

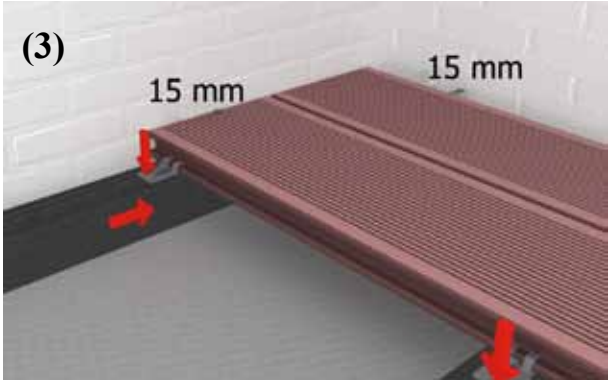

The following boards are then inserted into the previous standard clip and again secured with a standard clip **(3)**, repeat procedure for additional boards on all beams. The standard clips provide 5mm spacing between the boards.

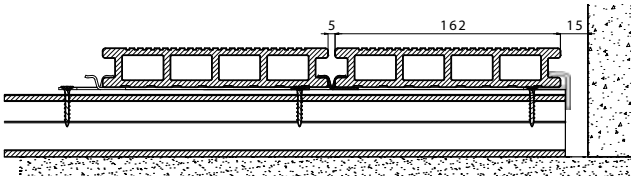

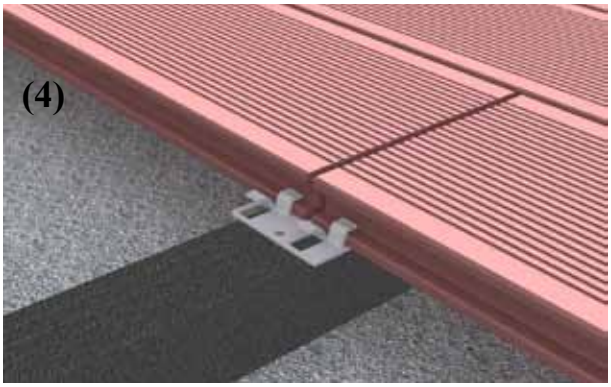

The butting clip allows boards to be joined lengthwise **(4)**. **Spacing between the short sides of the boards must be 10mm.** Alternate alignment of the spacing is recommended.

The butting clip lies a bit higher than the groove of the beam. To reduce this level you can first rub down the beam under the butting clip with a wood rasp or chisel. The butting clip is fixed at **the side of the board** and **not between the short sides** of the boards.

When all boards have been installed the starter and finishing clip has to be shoved at the end of all boards. Then the clip has to be secured with a screw horizontally **(5)**. If the terrace is enclosed by a wall, bend up the double lips, secure the clip vertically and bend down the lips in the original position. Use a flat iron stave and hammer to do so.

Finishing terrace:

The finishing of a terrace can be done with a skirt (DFS076) or with an L-Profile (DFL078). Pre-drilling is essential. It is essential that there is **effective and sufficient ventilation around and underneath the boards**. This can be obtained by finishing the short sides but leaving the long sides open or by leaving free space under the skirts or L-profiles, ...
The L-profile can also be fixed to the board with mounting glue.

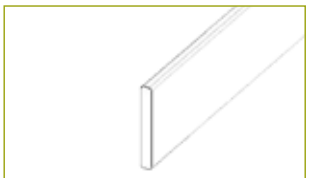

DFS076
Skirt 76x10mm

DFL078
L-Profile 78x39x4mm

Finishing long side:

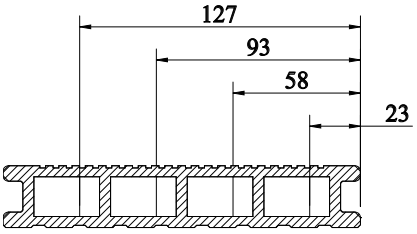

The above modular dimensions for cutting the boards lengthwise needs to be adhered to.

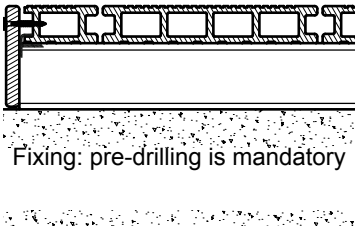

The skirt must be fixed at the same level as the top of the boards.

Finishing short side:

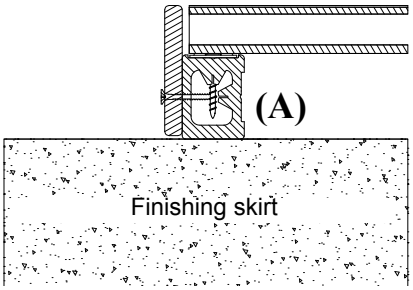

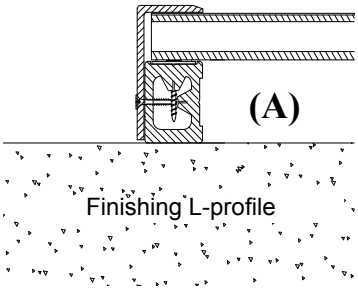

Placing the beam at the end of the boards is recommended **(A)**. If not, then the board overhang must **not exceed 50mm** from the last support beam **(B)**.

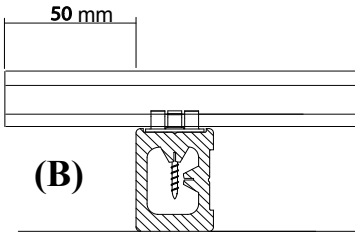

Different placements:

The general rules of slope, drainage, ventilation, expansion spacing, number of beams and fixing and use of the clips are applicable to all different placements.

Different placement 1: installation on an existing terrace:

In case of an existing terrace the original foundation and drainage can be used. The installation method is similar to that used on a solid ground installation. The beams have to be fixed directly to the floor with a maximum of 500mm spacing between the fixings.

Front view

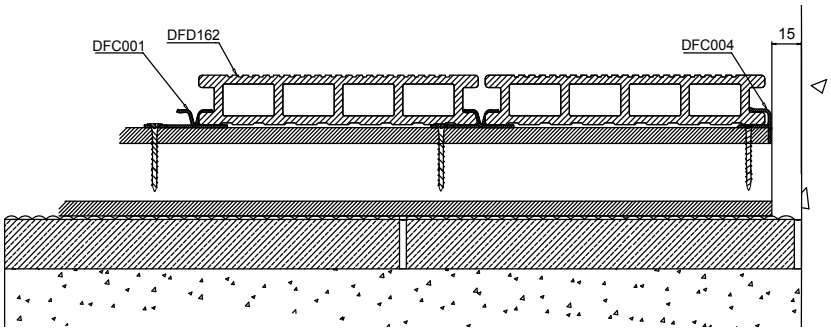

Side view

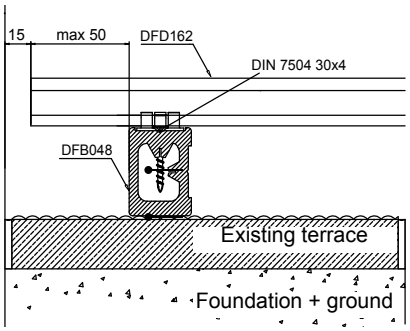

Different placement 2: installing on a roof : (Roof terrace, roof garden,...):

Reversed roof with a concrete foundation.

Front view

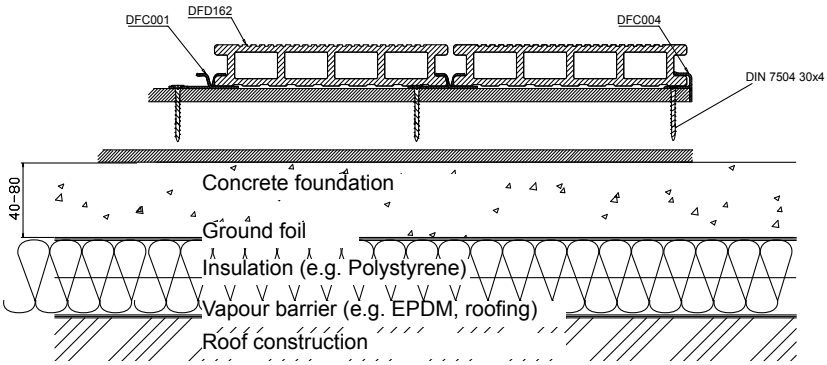

Side view

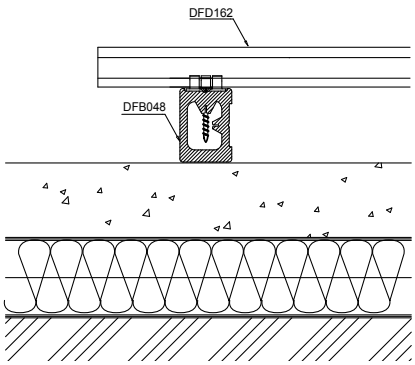

With an installation of a roof terrace the supporting structure always has to be fixed to the roof. 5mm/m spacing must be kept to allow expansion, with a minimum of 15mm away from every wall or fix object. The vapour barrier for walls and roofs has to be used in accordance with the general building regulations. This will reduce the build up of humidity in the structure.
The existing roof construction has to be of sufficient strength to support the weight of a roof terrace.

Installation with or without pedestals.

Front view

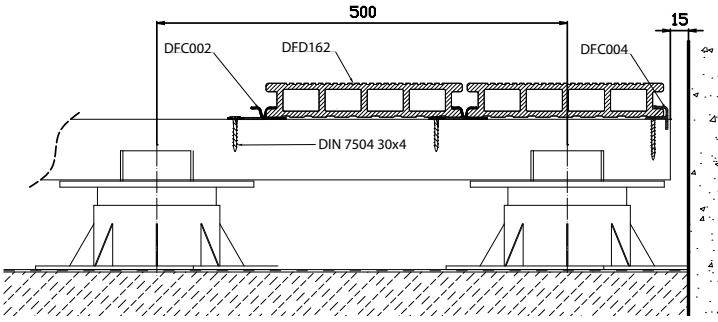

Side view

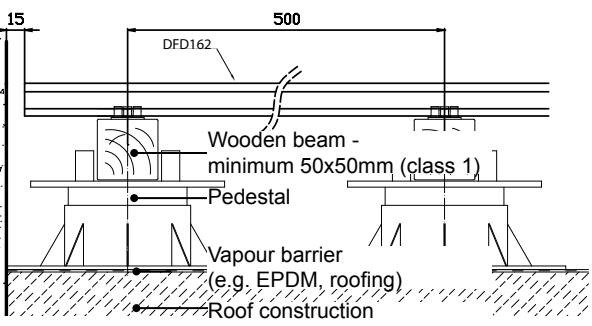

If the beams cannot be fixed to the roof construction a solid steel or timber (class 1) frame needs to be mounted. The Duofuse® beam (DFB048) cannot be used for this. Place the framework on the ground or on pedestals. The distance between the pedestals is a maximum 500mm. Use butting clips (DFC002) on wooden or steel beams instead of standard clips (DFC001).

Different placement 3: floating structure: (bridge, balcony, ...)

In case of a floating balcony the supporting structure has to be made of steel profiles to support the decking board, and in accordance with building regulations. The Duofuse® beam (DFB048) cannot be used for this. 5mm/m spacing must be kept to allow expansion. Fixing the steel profiles to the wall or construction has to be done in accordance with building regulations.

When fixing the boards directly to the steel profiles (see illustration) the board has to be fixed with butting clips (DFC002). Another possibility is to fix the boards on the Duofuse® beam (DFB048) with the standard clips (DFC001) and then fix the beam to the steel profile.
For safety reasons we advise to reduce the space between the steel profiles to 400mm.

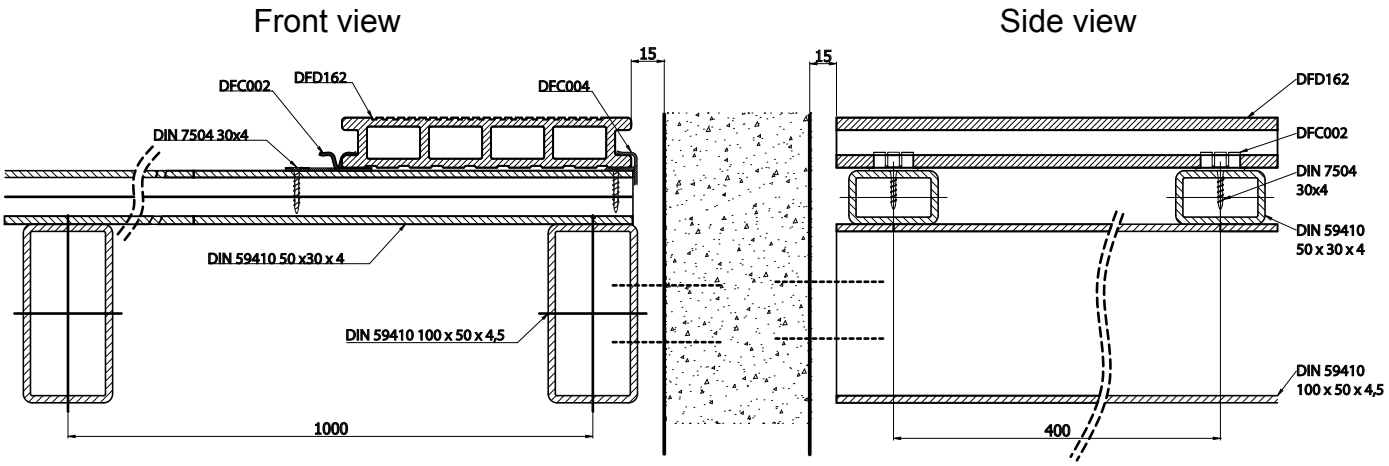

Different placement 4: placement around pool edge or humid environment:

5mm/m spacing must be kept to allow expansion, with a minimum of 15mm away from every wall or fix object. Every board has to be supported with at least 3 beams. Provide enough slope for drainage and ensure that there is adequate ventilation. To avoid stains, make the decking completely wet after installation.

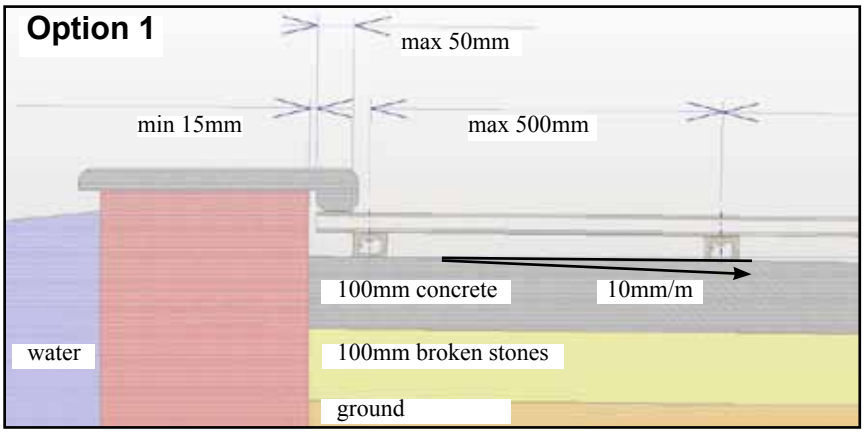

Option 1:
Place the board under the pool edge.

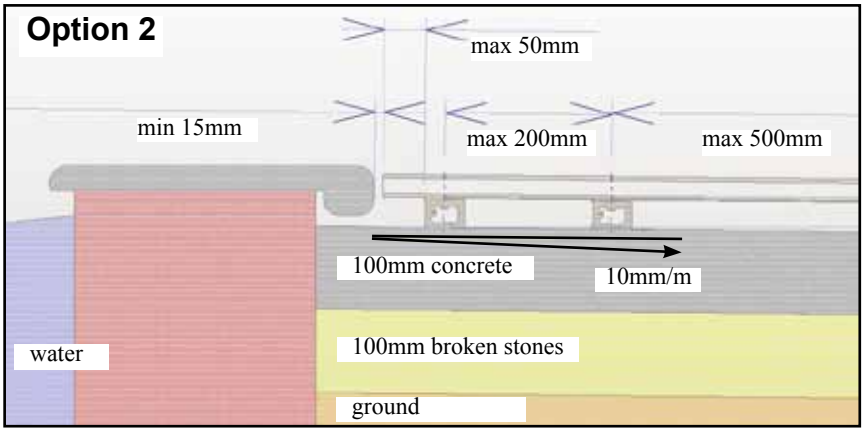

Option 2: Place the board on the same height of the pool edge. Place an extra beam at 200mm of the first beam.

Different placement 5: hatch cover in a terrace:

Hatch covers, frames,... are to be mounted on a galvanized welded steel frame. Fix the boards every 200mm with butting clips (DFC002) to the steel frame.

Maintenance:

The decking is easy to clean and special cleaning products are not necessary. For normal maintenance a brush or high pressure cleaner can be used (max. 80 bar). A mild cleaning product can be used. A rotating head cleaner should not be used. Grease stain and oil can be removed with a domestic degreasing agent. For persistent dirt, use a diluted bleach solution (25% bleach 10° and 75% water). Then rinse with large quantities of water. Do not use solvent-based materials.

To keep a good drainage it is necessary to clean the space between each board.

In case of stains:

1 Remove the stain immediately: this is best done before the stain can penetrate the material and dry. Clean with water and a mild soap solution.

2 If the stain isn't removed immediately, the stain can penetrate the material and dry permanently. Thoroughly clean with high pressure cleaner.
Scour in the direction of the grooves, the slight discoloration will even out in 6 to 10 weeks.

Replacing a damaged decking board:

1. The decking board has to be cut down the length.

2. Cut in two pieces then the decking board can be removed.

3. Bend up the side of the clip with the single lips.

4. The new decking board has to be fitted in the side with the double lips.

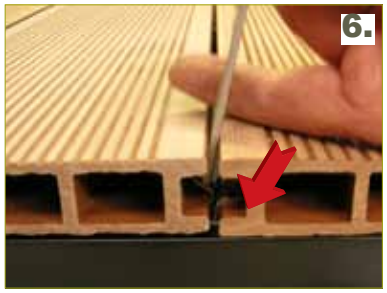

5. Slide the board along the straight up lips down into its original place.

6. Bend the lip again in its normal position. Use a flat iron stave and hammer.